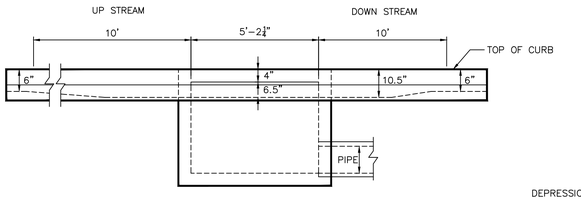

SECTION C-C

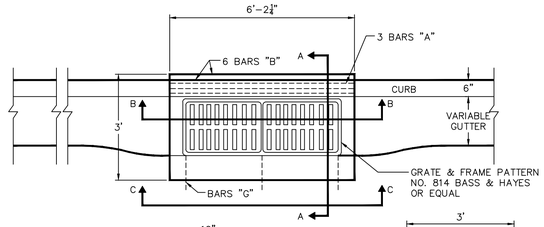

PLAN

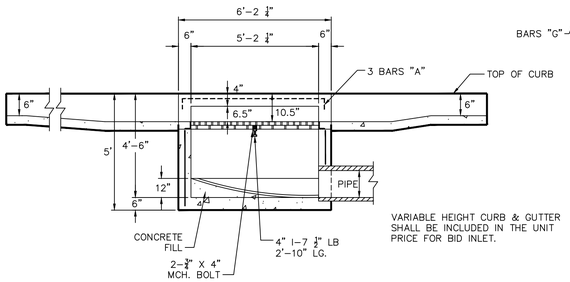

SECTION B-B

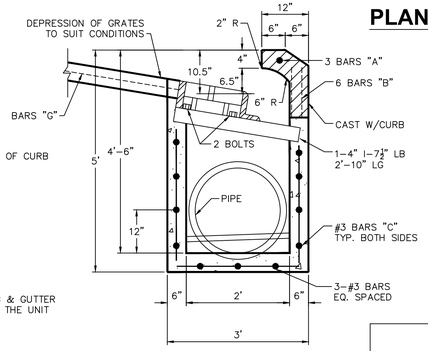

SECTION A-A

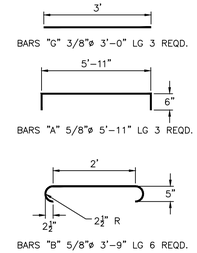

STEEL DETAILS

REINFORCING STEEL- NO. 3 12" O.C.E.W. EQUALLY SPACED HORIZONTALLY IN INLET FOOTINGS.

DOUBLE GRATE INLET

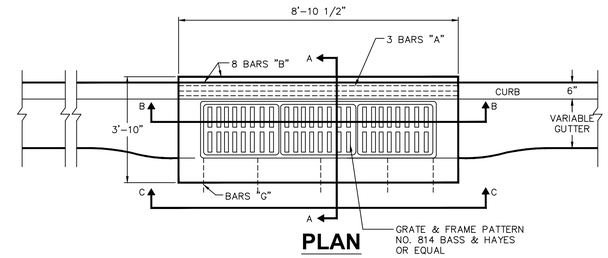

PLAN

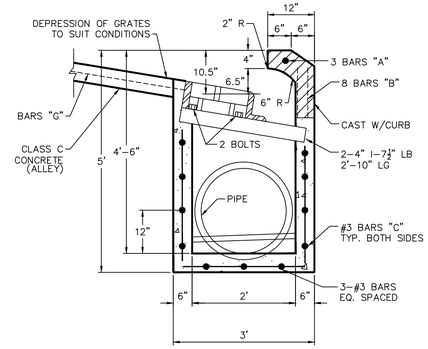

SECTION A-A

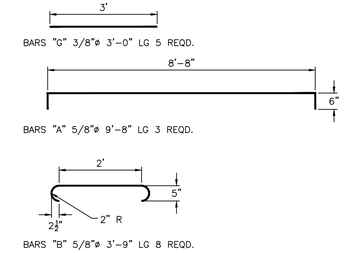

STEEL DETAILS

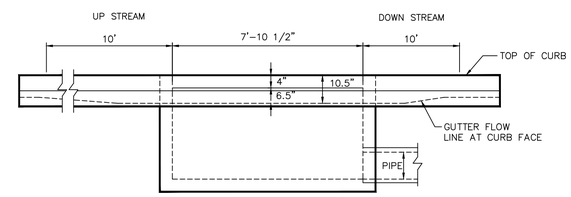

SECTION C-C

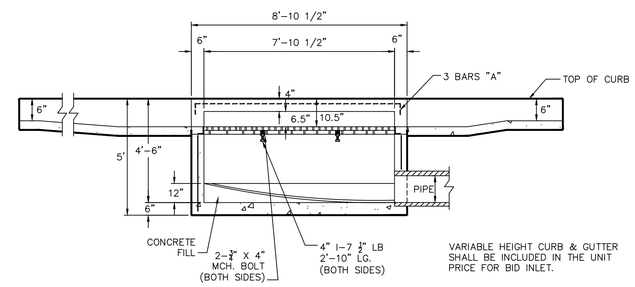

SECTION B-B

TRIPLE GRATE INLET

NOTES:

1. CONCRETE SHALL BE CLASS A FOR INLET BOXES.
2. ALLEY PAVEMENT SHALL BE CLASS C CONCRETE.

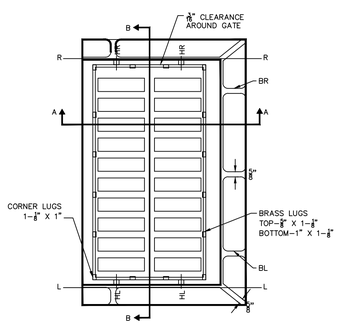

PLAN

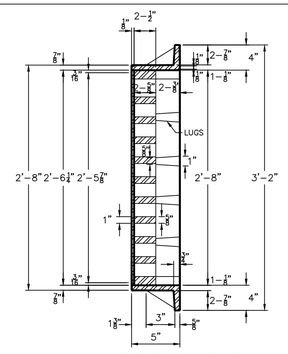

SECTION B-B

FOR STD. SINGLE GRATE INLETS: FRAME AS SHOWN, OMITTING BOLT HOLES AND BRACKETS "BR" AND "BL".

FOR STD. DOUBLE GRATE INLETS: RIGHT FRAME AS SHOWN, OMITTING FLANGE ON LINE "L-L", PUT ON BRACKET "BL" AND CORE HOLES "HL"; LEFT FRAME AS SHOWN, OMITTING FLANGE ON LINE "R-R", PUT ON BRACKET "BR", AND CORE HOLES "HR".

FOR STD. TRIPLE GRATE INLET: MAKE ONE RIGHT FRAME, ONE LEFT FRAME, AND ONE FRAME OMITTING BOTH END FLANGES. PUT ON BRACKETS "BR" AND "BL" AND CORE HOLES "HR" AND "HL".

THE AVERAGE WEIGHT OF ALL GRATES SHALL NOT BE LESS THAN 153 LBS. THE AVERAGE WEIGHT OF A SINGLE GRATE INLET FRAME SHALL NOT BE LESS THAN 185 LBS. THE DOUBLE GRATE INLET FRAMES SHALL NOT BE LESS THAN 177 LBS., AND THE CENTER FRAMES SHALL NOT BE LESS THAN 170 LBS. EACH.

ALL MATERIALS SHALL CONFORM TO THE SPECS. FOR "CAST IRON" AND BE MADE IN THE USA.

INLET GRATE & FRAME

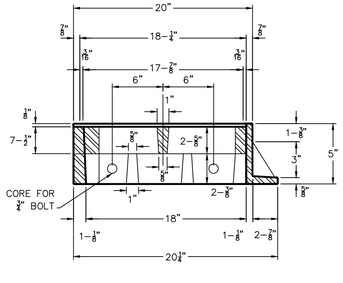

SECTION A-A

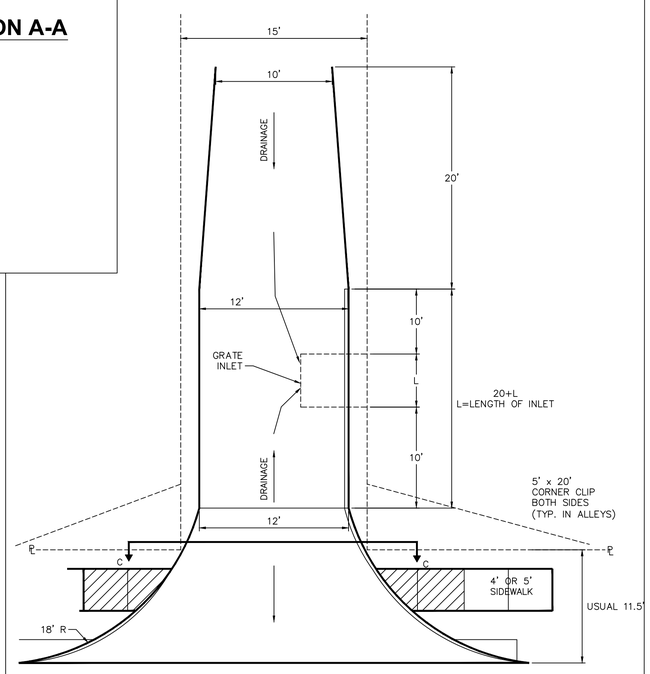

ALLEY W/GRATE INLET (INLET LOCATION)

NOTE:

MAX SLOPE OF 2% @ SIDEWALK

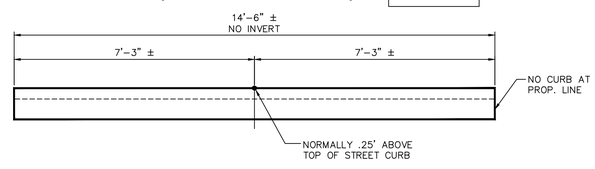

SECTION C-C

Revisions:

City of Richardson
411 W. Arapaho Road
Suite 204
Richardson, Texas 75080
voice: 972 744-4280
fax: 972 744-5804

Drawn By: RGB
Checked By: COR

CITY OF RICHARDSON TEXAS

STANDARD DETAILS

City of Richardson, Texas

NO ADDITIONS OR CHANGES TO STANDARD DETAIL SHEETS UNLESS APPROVED BY CITY OF RICHARDSON

24"x36" Scale: NTS
11"x17" Scale: NTS
Vertical Scale: NA
Project Number: XXX
Issue Date: 01 MAY 14
Sheet Title: ALLEY
Sheet No.: C-9